MANUAL

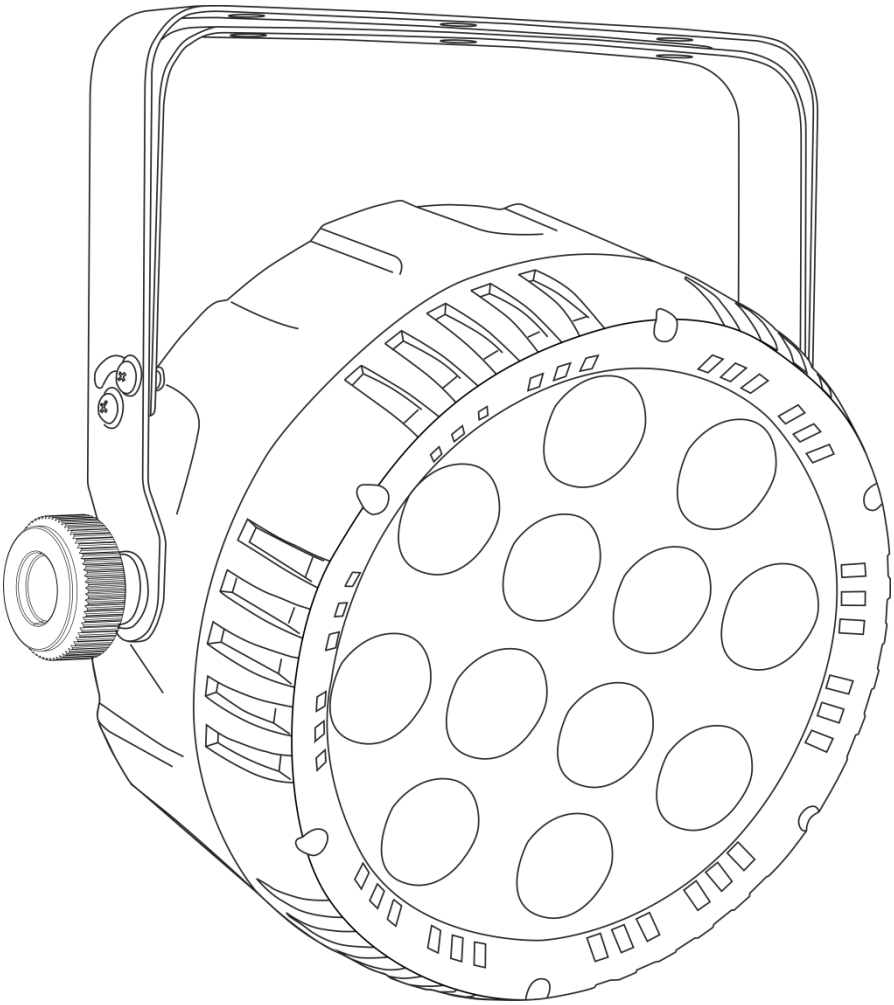

ENGLISH

Club Par 12-4 RGBW V1

Ordercode: 42650

Highlite International B.V. – Vestastraat 2 – 6468 EX – Kerkrade – the Netherlands

Table of contents

Warning 2
Safety Instructions 2
Operating Determinations 4
Rigging 4
Connection with the mains 5
Return Procedure 6
Claims 6

Description of the device 7
Frontside 7
Backside 8

Installation 8

Set Up and Operation 8
Control Modes 9
One Club Par (Built-in programs, Static Color Mode and Manual Mode) 9
One Club Par (Sound-controlled) 9
Multiple Club Pars (DMX Control) 9
Fixture Linking 10
Data Cabling 10
Control Panel 11
Control Mode 11
DMX Addressing 11
Menu Overview 12
Main Menu Options 13
1. DMX-512 Mode 13
2. Channel Mode 13
3. Speed 14
4. Built-in programs 14
5. Sound-controlled 14
6. Static Colors 14
7. Strobe 14
8. Red 14
9. Green 14
10. Blue 14
11. White 15
12. Node 15
13. LED Display 15
14. Temperature 15
15. Version 15
16. Reset 15
DMX Channels 15
4 channels 15
9 channels 16

Maintenance 17
Replacing the Fuse 17

Troubleshooting 17
No Light 17
No Response to DMX 18

Product Specifications 19

Dimensions 20

Notes 21

Warning

For your own safety, please read this user manual carefully before your initial start-up!

Unpacking Instructions

Immediately upon receiving this product, carefully unpack the carton and check the contents to ensure that all parts are present, and have been received in good condition. Notify the dealer immediately and retain packing material for inspection if any parts appear damaged from shipping or the carton itself shows signs of mishandling. Save the carton and all packing materials. In the event that a fixture must be returned to the factory, it is important that the fixture be returned in the original factory box and packing.

Your shipment includes:

- Showtec Club Par 12-4 RGBW
- IEC power cable (1,5 m)
- User manual

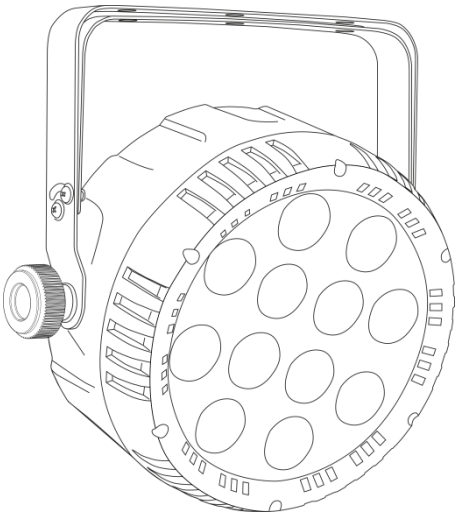

LED Expected Lifespan

LEDs gradually decline in brightness over time. HEAT is the dominant factor that leads to the acceleration of this decline. Packaged in clusters, LEDs exhibit higher operating temperatures than in ideal or singular optimum conditions. For this reason, when all color LEDs are used at their fullest intensity, life of the LEDs is significantly reduced. If improving the lifespan is of higher priority, place care in providing for lower operational temperatures. This may include climatic-environmental and the reduction of overall projection intensity.

CAUTION!
Keep this device away from rain and moisture!
Unplug mains lead before opening the housing!

Safety Instructions

Every person involved with the installation, operation and maintenance of this device has to:

- be qualified
- follow the instructions of this manual

CAUTION! Be careful with your operations.
With a dangerous voltage you can suffer
a dangerous electric shock when touching the wires!

Before the initial start-up, please make sure that there is no damage caused by transportation. Should there be any, consult your dealer and do not use the device.

To maintain perfect condition and to ensure a safe operation, it is absolutely necessary for the user to follow the safety instructions and warning notes contained in this manual.

Please consider that damages caused by manual modifications to the device are not subject to warranty.

This device contains no user-serviceable parts. Refer servicing to qualified technicians only.

IMPORTANT:

The manufacturer will not accept liability for any resulting damages caused by the non-observance of this manual or any unauthorized modification to the device.

- Never let the power cord come into contact with other cables! Handle the power cord and all connections with the mains with particular caution!
- Never remove warning or informative labels from the unit.
- Never use anything to cover the ground contact.
- Never lift the fixture holding it by the projector-head, as the mechanics may be damaged. Always hold the fixture by the transport handles.
- Never place any material over the lens.
- Never look directly into the light source.
- Never leave any cables lying around.
- Never loosen the screws of the rotating gobo otherwise you risk opening of the ball bearing.
- Do not insert objects into air vents.
- Do not connect this device to a dimmerpack.
- Do not switch the device on and off in short intervals, as this will reduce the device's life.
- Do not touch the device's housing bare-handed during its operation (housing becomes very hot). Allow the fixture to cool for at least 5 minutes before handling.
- Do not shake the device. Avoid brute force when installing or operating the device.
- Only use the device indoors, avoid contact with water or other liquids.
- Only operate the fixture after having checked if the housing is firmly closed and all screws are tightly fastened.
- Only operate the device after having familiarized with its functions.
- Avoid flames and do not put close to flammable liquids or gases.
- Always keep the case closed while operating.
- Always allow a free air space of at least 50 cm around the unit for ventilation.
- Always disconnect power from the mains, when device is not used or before cleaning! Only handle the power cord holding it by the plug. Never pull out the plug by tugging the power cord.
- Make sure that the device is not exposed to extreme heat, moisture or dust.
- Make sure that the available voltage is not higher than stated on the rear panel.
- Make sure that the power cord is never crimped or damaged. Check the device and the power cord from time to time.
- If the lens is obviously damaged, it has to be replaced.
- If device was dropped or struck, disconnect mains power supply immediately. Have a qualified engineer inspect for safety before operating.
- If the device has been exposed to drastic temperature fluctuation (e.g. after transportation), do not switch it on immediately. The arising condensation water might damage your device. Leave the device switched off until it has reached room temperature.
- If your Showtec device fails to work properly, discontinue the use immediately. Pack the unit securely (preferably in the original packing material), and return it to your Showtec dealer for service.
- For adult use only. The fixture must be installed beyond the reach of children. Never leave the unit running unattended.
- Never attempt to bypass the thermostatic switch or fuses.
- For replacement use fuses of same type and rating only.

- The user is responsible for correct positioning and operating of the Club Par 12-4 RGBW. The manufacturer will not accept liability for damages caused by the misuse or incorrect installation of this device.
- This device falls under protection class I. Therefore it is essential to connect the yellow/green conductor to earth.
- During the initial start-up some smoke or smell may arise. This is a normal process and does not necessarily mean that the device is defective.
- Repairs, servicing and electric connection must be carried out by a qualified technician.
- WARRANTY: Till one year after date of purchase.

CAUTION! EYEDAMAGES !!!
NEVER LOOK DIRECTLY INTO THE LIGHTSOURCE !!!

Operating Determinations

- This device is not designed for permanent operation. Consistent operation breaks will ensure that the device will serve you for a long time without defects.
- The minimum distance between light output and the illuminated surface must be bigger than 1 meter.
- The maximum ambient temperature t_a = 40°C must never be exceeded.
- The relative humidity must not exceed 50 % with an ambient temperature of 40° C.
- If this device is operated in any other way than the one described in this manual, the product may suffer damages and the warranty becomes void.
- Any other operation may lead to dangers like short-circuit, burns, electric shock, crash, etc.

You endanger your own safety and the safety of others!

Rigging

Please follow the European and national guidelines concerning rigging, trussing and all other safety issues.

Do not attempt the installation yourself !
Always let the installation be carried out by an authorized dealer !

Procedure:

- If the projector is lowered from the ceiling or high joists, professional trussing systems have to be used.
- Use a clamp to mount the projector, with the mounting bracket, to the trussing system.
- The projector must never be fixed swinging freely in the room.
- The installation must always be secured with a safety attachment, e.g. an appropriate safety net or safety cable.
- When rigging, derigging or servicing the projector, always make sure, that the area below the installation site is secured and that there are not any unauthorized people around.

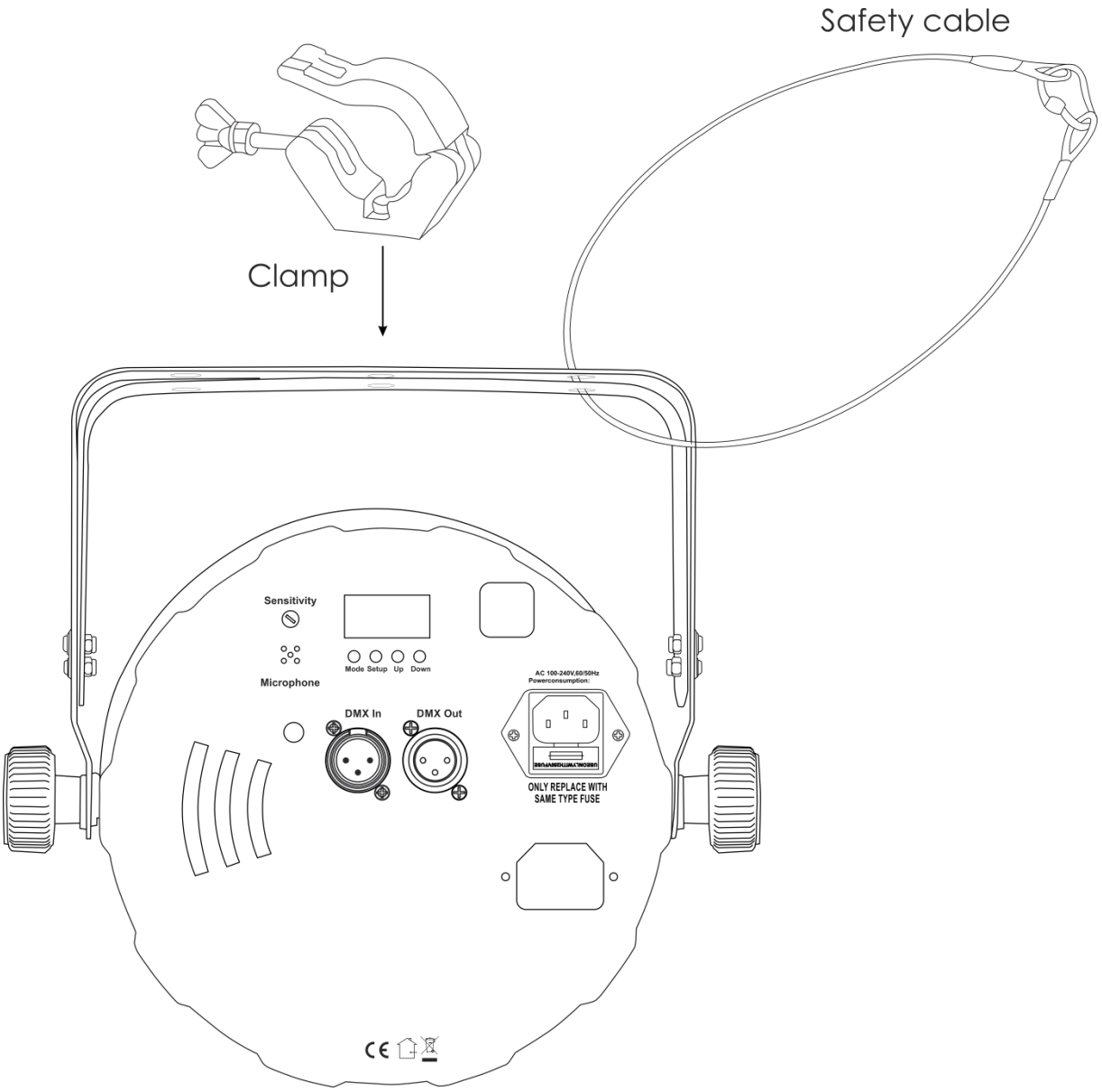

The Club Par 12-4 RGBW can be placed on a flat stage floor or mounted to any kind of truss with a clamp.

Improper installation can cause serious injuries and/or damage of property!

Connection with the mains

Connect the device to the mains with the power-plug.
Always check if the right color cable is connected to the right place.

International	EU Cable	UK Cable	US Cable	Pin
L	BROWN	RED	YELLOW/COPPER	PHASE
N	BLUE	BLACK	SILVER	NEUTRAL
⏚	YELLOW/GREEN	GREEN	GREEN	PROTECTIVE GROUND

Make sure that the device is always properly connected to the earth!

Improper installation can cause serious injuries and/or damage of property!

Return Procedure

Returned merchandise must be sent prepaid and in the original packing, call tags will not be issued. Package must be clearly labeled with a Return Authorization Number (RMA number). Products returned without an RMA number will be refused. Highlite will not accept the returned goods or any responsibility. Call Highlite 0031-455667723 or mail aftersales@highlite.nl and request an RMA prior to shipping the fixture. Be prepared to provide the model number, serial number and a brief description of the cause for the return. Be sure to properly pack fixture, any shipping damage resulting from inadequate packaging is the customer's responsibility. Highlite reserves the right to use its own discretion to repair or replace product(s). As a suggestion, proper UPS packing or double-boxing is always a safe method to use.

Note: If you are given an RMA number, please include the following information on a piece of paper inside the box:

01) Your name
02) Your address
03) Your phone number
04) A brief description of the symptoms

Claims

The client has the obligation to check the delivered goods immediately upon delivery for any short-comings and/or visible defects, or perform this check after our announcement that the goods are at their disposal. Damage incurred in shipping is the responsibility of the shipper; therefore the damage must be reported to the carrier upon receipt of merchandise.

It is the customer's responsibility to report and submit claims with the shipper in the event that a fixture is damaged due to shipping. Transportation damage has to be reported to us within one day after receipt of the delivery.

Any return shipment has to be made post-paid at all times. Return shipments must be accompanied with a letter defining the reason for return shipment. Non-prepaid return shipments will be refused, unless agreed otherwise in writing.

Complaints against us must be prepared in writing or sent by fax within 10 working days after receipt of the invoice. After this period complaints will not be handled anymore.

Complaints will only then be considered if the client has so far complied with all parts of the agreement, regardless of the agreement from which the obligation is resulting.

Description of the device

Features

The Club Par 12-4 RGBW is an compact light effect with high output and great effects.
Ideal solution for small clubs and mobile DJs

- Compact size
- Sound Control
- Input voltage: 100-240V, 60/50Hz
- Drive Current: 500mA
- Refresh rate: 1200Hz
- Power consumption: 77W
- DMX channels: 4 or 9 channels
- 4-digit LED display for easy setup
- Light source: 12 x 4-in1 8W RGBW LEDs
- Lumens: 3200
- Lux @2m: 5400
- Control modes: Built-in programs, Static Colors, DMX, Sound-controlled, Manual color control
- Control protocol: DMX-512
- Dimmer: 0-100%
- Strobe: 0-20Hz
- Beam Angle: 25°
- Protection rate: IP-20
- Housing: Metal & Flame retardant plastic
- Cooling: Fan
- Connections: IEC & 3-pin XLR IN & OUT
- Fuse: T2AL/250V
- Dimensions: 290 x 270 x 110 mm (LxWxH)
- Weight: 2,3 kg

Frontside

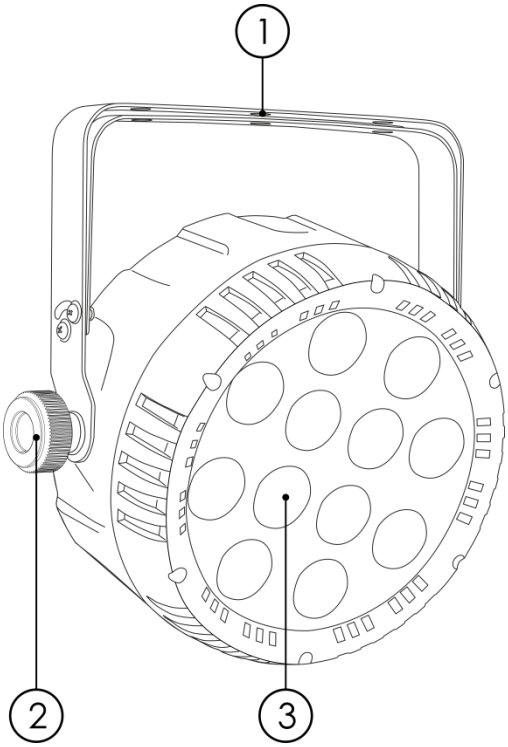

Fig. 01

01) Mounting bracket with inclination screw
02) Adjustment screw
03) 12 x 4-in1 8W RGBW LEDs

Backside

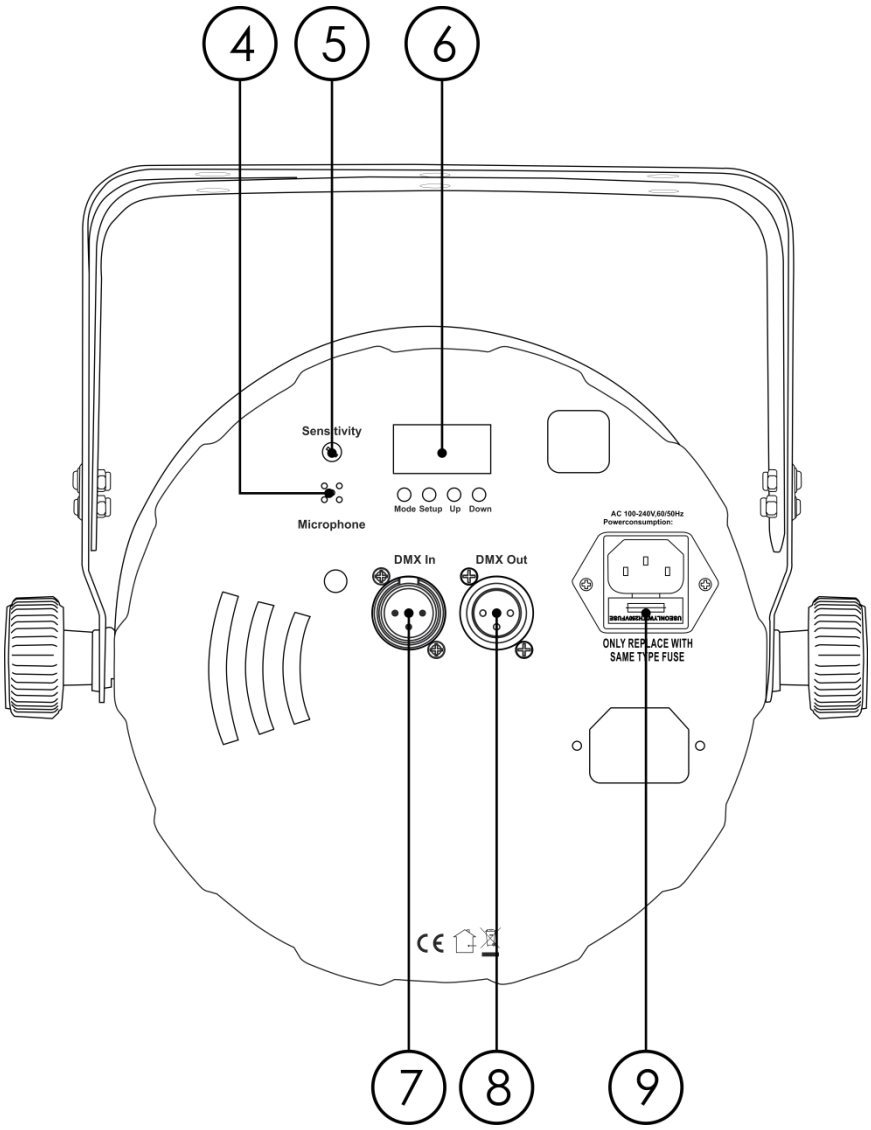

Fig. 02

04) Built-in Microphone
05) Audio Sensitivity
06) 4-digit LED display + menu buttons
07) 3-pin DMX signal connector IN
08) 3-pin DMX signal connector
09) IEC power connector 100-240V + Fuse T2AL/250V

Installation

Remove all packing materials from the Club Par 12-4 RGBW. Check if all foam and plastic padding is removed. Connect all cables.
Do not supply power before the whole system is set up and connected properly.
Always disconnect from electric mains power supply before cleaning or servicing.
Damages caused by non-observance are not subject to warranty.

Set Up and Operation

Follow the directions below, as they pertain to your preferred operation mode.
Before plugging the unit in, always make sure that the power supply matches the product specification voltage. Do not attempt to operate a 120V specification product on 230V power, or vice versa.
Connect the device to the main power supply.

Control Modes

There are 5 modes:

- Built-in programs
- Manual Mode
- Static Color
- Sound-controlled
- DMX-512 (4CH or 9CH)

One Club Par (Built-in programs, Static Color Mode and Manual Mode)

01) Fasten the effect light to a firm trussing. Leave at least 0,5 meter on all sides for air circulation.
02) Plug the end of the electric mains power cord into a proper electric power supply socket.
03) When the Club Par is not connected with a DMX cable, it functions as a stand-alone device. Please see page 14 for more information about the Built-in programs, Auto Mode and Manual Mode.

One Club Par (Sound-controlled)

01) Fasten the effect light to a firm trussing. Leave at least 0,5 meter on all sides for air circulation.
02) Plug the end of the electric mains power cord into a proper electric power supply socket.
03) Turn on the music. If the device is set to sound-control, then the Club Par will react to the beat of the music. Please see page 14 for more information about the sound-control options.

Multiple Club Pars (DMX Control)

01) Fasten the effect light to a firm trussing. Leave at least 0,5 meter on all sides for air circulation.
02) Always use a safety cable (ordercode 70140 / 70141).
03) Use a 3-pin XLR cable to connect the Club Pars and other devices.

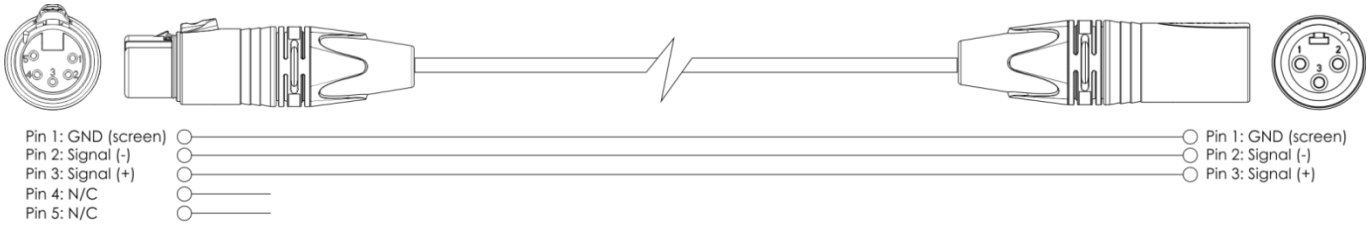

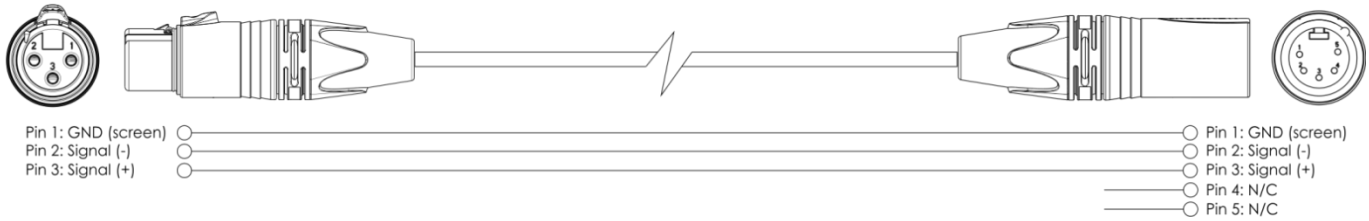

04) Link the units as shown in fig. 03. Connect the first unit's DMX "out" socket with the second unit's "in" socket, using a DMX-signal cable. Repeat this process to link the second, third, and fourth units.
05) Supply electric power: Plug electric mains power cords into each unit's IEC socket, then plug the other end of the mains power cord into proper electric power supply sockets, starting with the first unit. Do not supply power before the whole system is set up and connected properly.

Multiple Club Pars DMX Set Up

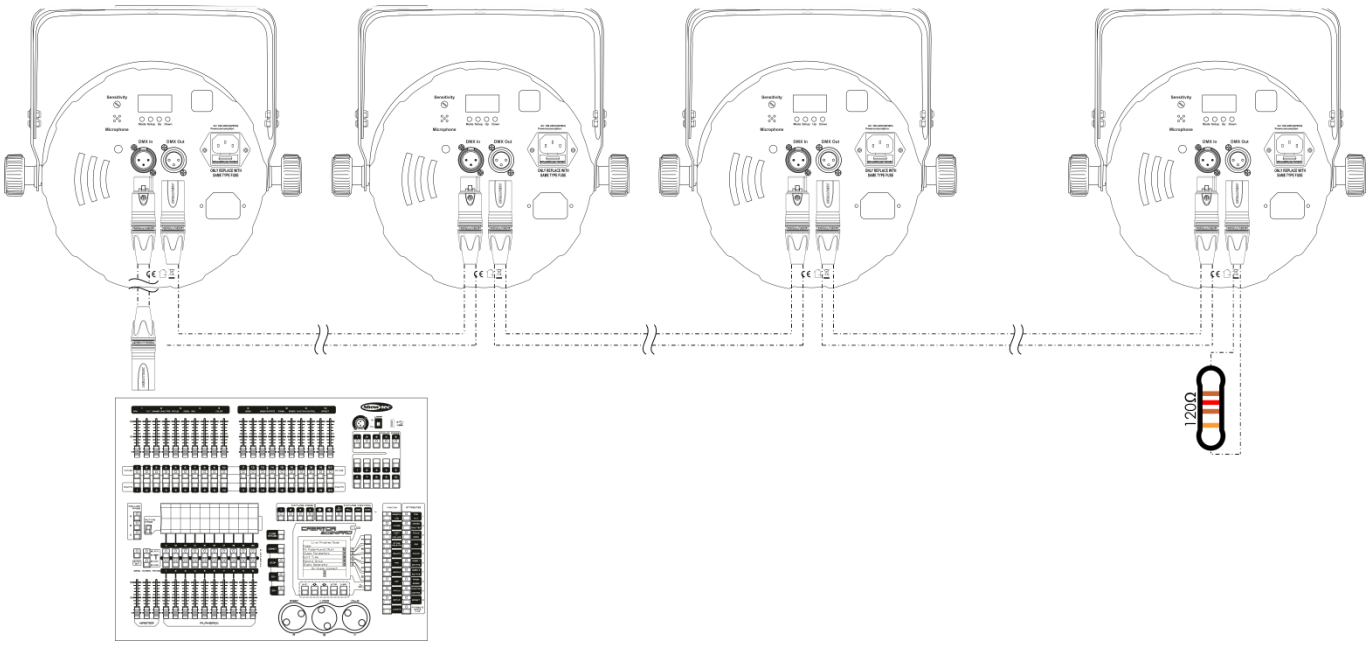

Fig. 03

Note : Link all cables before connecting electric power

Fixture Linking

You will need a serial data link to run light shows of one or more fixtures using a DMX-512 controller. The combined number of channels required by all the fixtures on a serial data link determines the number of fixtures the data link can support.

Important: Fixtures on a serial data link must be daisy-chained in a single line. To comply with the EIA-485 standard, no more than 30 devices should be connected on one data link. Connecting more than 30 fixtures on one serial data link without the use of a DMX optically isolated splitter may result in deterioration of the digital DMX signal.
Maximum recommended DMX data link distance: 100 meters
Maximum recommended number of fixtures on a DMX data link: 30 fixtures

Data Cabling

To link fixtures together, you must obtain data cables. You can purchase DAP Audio certified DMX cables directly from a dealer/distributor or construct your own cable. If you choose to create your own cable, please use data-grade cables that can carry a high quality signal and are less prone to electromagnetic interference.

DAP Audio DMX Data Cables

- DAP Audio Basic microphone cable for allround use. bal. XLR/M 3-pin > XLR/F 3-pin. **Ordercode** FL01150 (1,5 m), FL013 (3 m), FL016 (6 m), FL0110 (10 m), FL0115 (15 m), FL0120 (20 m).
- DAP Audio X-type data cable XLR/M 3-pin > XLR/F 3-pin. **Ordercode** FLX0175 (0,75 m), FLX01150 (1,5 m), FLX013 (3 m), FLX016 (6 m), FLX0110 (10 m).
- DAP Audio cable for the demanding user with exceptional audio-qualities and connector made by Neutrik®. **Ordercode** FL71150 (1,5 m), FL713 (3 m), FL716 (6 m), FL7110 (10 m).
- DAP Audio cable for the demanding user with exceptional audio-qualities and connector made by Neutrik®. **Ordercode** FL7275 (0,75 m), FL72150 (1,5 m), FL723 (3 m), FL726 (6 m), FL7210 (10 m).
- DAP Audio 110 Ohm cable with digital signal transmission. **Ordercode** FL0975 (0,75 m), FL09150 (1,5 m), FL093 (3 m), FL096 (6 m), FL0910 (10 m), FL0915 (15 m), FL0920 (20 m).

The Club Par 12-4 RGBW can be operated with a controller in **control mode** or without the controller in **stand-alone mode.**

Control Panel

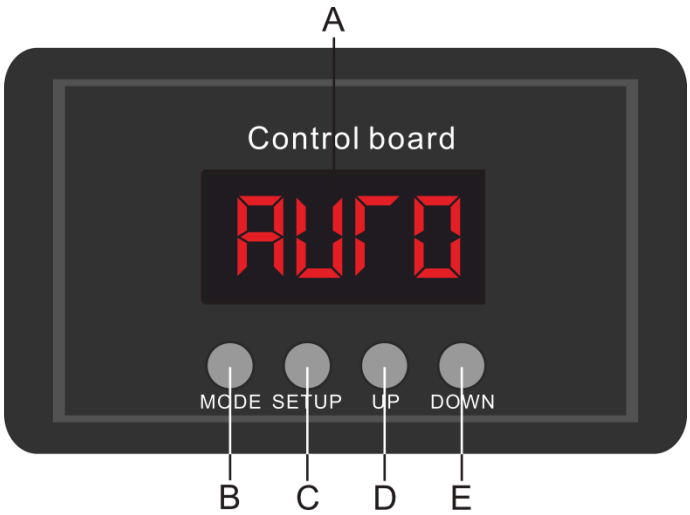

A) LED display
B) MODE button
C) SETUP button
D) UP button
E) DOWN button

Fig. 04

Control Mode

The fixtures are individually addressed on a data-link and connected to the controller.
The fixtures respond to the DMX signal from the controller. (When you select the DMX address and save it, the controller will display the saved DMX address, next time.)

DMX Addressing

The control panel on the front side of the base allows you to assign DMX fixture addresses, which is the first channel with which the Club Par will respond to the controller.
Please note, when you use the controller, the unit has **9** channels.
When using multiple Club Pars, make sure you set the DMX addresses right.
Therefore, the DMX address of the first Club Par should be **1(001)**; the DMX address of the second Club Par should be **1+9=10 (010**); the DMX address of the third Club Par should be **10+9=19 (019)**, etc. Please, be sure that you do not have any overlapping channels in order to control each Club Par correctly.
If two or more Club Pars are addressed similarly, they will work similarly.

Controlling:

After having addressed all Club Par fixtures, you may now start operating these via your lighting controller.
Note: After switching on, the Club Par will automatically detect whether DMX 512 data is received or not.
If there is no data received at the DMX-input, the "**LED** " on the control panel will not flash.
If not, the problem may be:

- The XLR cable from the controller is not connected with the input of the Club Par 12-4 RGBW.
- The controller is switched off or defective, the cable or connector is detective, or the signal wires are swapped in the input connector.

Note: It is necessary to insert an XLR termination plug (with 120 Ohm) in the last fixture in order to ensure proper transmission on the DMX data link.

⚠ Display Off after 30 seconds ⚠

When no button is pressed for 10 seconds, the display will turn off.
To light up the display, you have to press the MODE, SETUP, UP or DOWN button.
Once you have pressed the button, the display will light up.

Menu Overview

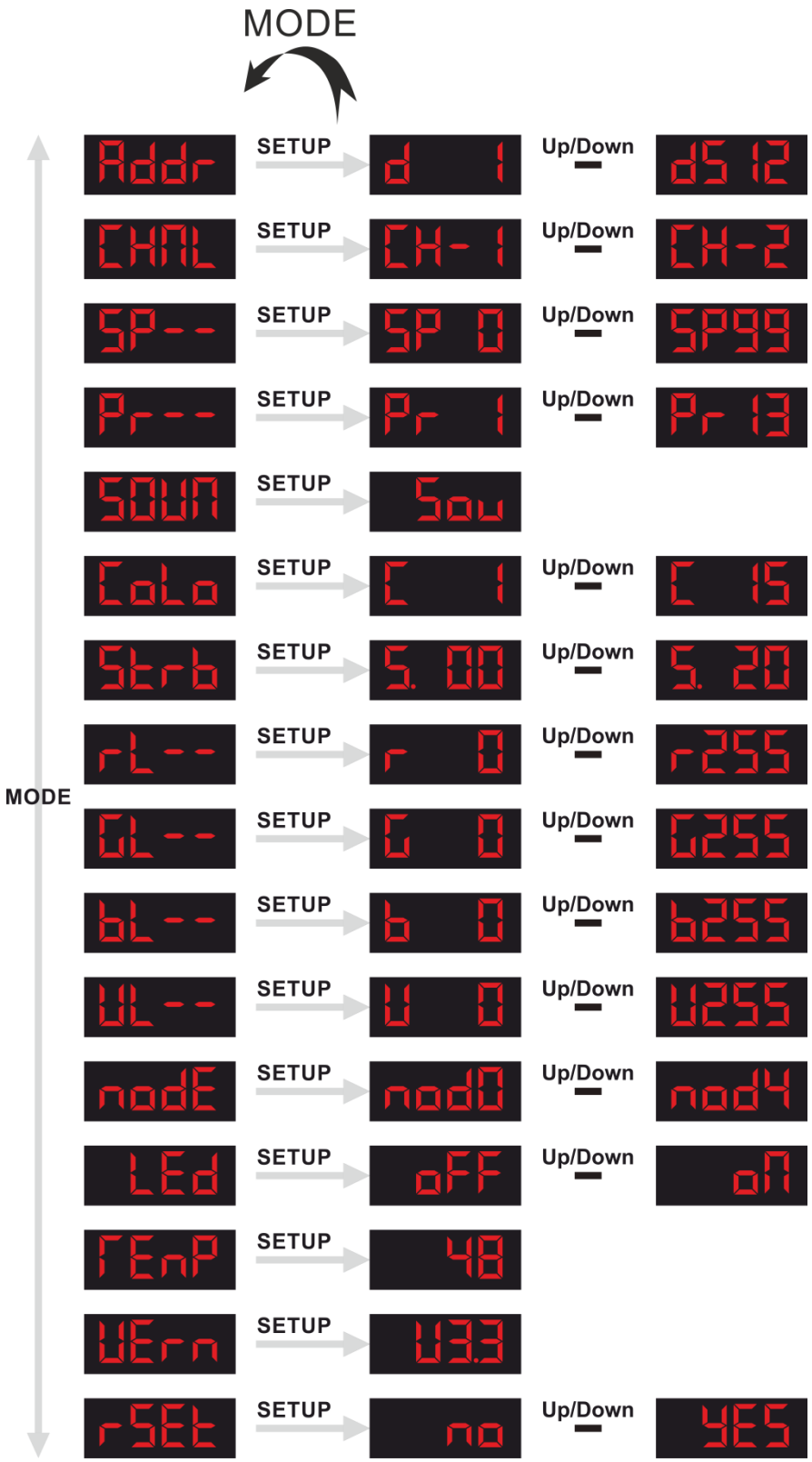

Main Menu Options

Addr	DMX-512 Mode
CHNL	Channel Mode
SP--	Program Speed
Pr--	Built-in programs
SOUN	Sound-controlled Mode
CoLo	Static Color Mode
Strb	Strobe
rL--	Red
GL--	Green
bL--	Blue
UL--	White
modE	Mode
LEd	Led On/Off
TEnP	Temperature
UErn	Version
rSEt	Reset

1. DMX-512 Mode

With this menu, you can set the DMX address and select the desired channel mode.

01) Press the **MODE** button until the display shows Addr.
02) Press the **SETUP** button to open the submenu, the display will show d 1 Up/Down d512.
03) Press the **UP/DOWN** buttons to choose the desired DMX address. There are 512 DMX addresses available.

2. Channel Mode

With this menu, you can set the desired channel mode.

01) Press the **MODE** button until the display shows CHNL.
02) Press the **SETUP** button to open the submenu, then press the **UP/DOWN** buttons to choose one of the 2 channel modes:

CH-1	4-channel mode
CH-2	9-channel mode

3. Speed

01) Press the **MODE** button until the display shows SP--.
02) Press the **SETUP** button to open the submenu, then press the **UP/DOWN** buttons to adjust the run speed of the built-in programs. The adjustment range is between SP 0 Up/Down SP99, 00-99 (from fast to slow).

4. Built-in programs

With this menu, you can set the built-in programs.

01) Press the **MODE** button until the display shows Pr--.
02) Press the **SETUP** button to open the submenu, then press the **UP/DOWN** buttons to toggle between one of the 13 built-in programs: Pr 1 Up/Down Pr 13.
03) The device will now run the desired built-in program.

5. Sound-controlled

With this menu, you can set the audio sensitivity.

01) Press the **MODE** button until the display shows SOUN.
02) Press the **SETUP** button until the display shows Sou. Use the control on the back to adjust the sensitivity.

6. Static Colors

With this menu, you can set the static colors.

01) Press the **MODE** button until the display shows CoLo.
02) Press the **SETUP** button to open the submenu, then press the **UP/DOWN** buttons to toggle between one of the 15 built-in colors: C 1 Up/Down C 15.
03) The device will now run the desired static color.

7. Strobe

With this menu, you can set the Strobe speed.

01) Press the **MODE** button until the display shows Strb.
02) Press the **SETUP** button to open the submenu, then press the **UP/DOWN** buttons to set the strobe speed: S 00 Up/Down S 20.
03) The device will now run at the desired strobe speed.

8. Red

With this menu, you can manually adjust the intensity of the red LEDs.

01) Press the **MODE** button until the display shows rL--.
02) Press the **SETUP** button to open the submenu, then press the **UP/DOWN** buttons to adjust the intensity of the red LEDs. Adjustment range is between 0-255, from low to high intensity.

9. Green

With this menu, you can manually adjust the intensity of the green LEDs.

01) Press the **MODE** button until the display shows GL--.
02) Press the **SETUP** button to open the submenu, then press the **UP/DOWN** buttons to adjust the intensity of the green LEDs. Adjustment range is between 0-255, from low to high intensity.

10. Blue

With this menu, you can manually adjust the intensity of the blue LEDs.

01) Press the **MODE** button until the display shows bL--.
02) Press the **SETUP** button to open the submenu, then press the **UP/DOWN** buttons to adjust the intensity of the blue LEDs. Adjustment range is between 0-255, from low to high intensity.

11. White

With this menu, you can manually adjust the intensity of the white LEDs.

01) Press the **MODE** button until the display shows UL--.
02) Press the **SETUP** button to open the submenu, then press the **UP/DOWN** buttons to adjust the intensity of the white LEDs. Adjustment range is between 0-255, from low to high intensity.

12. Node

With this menu, you can set the dimmer curve of your Club Par.

01) Press the **MODE** button until the display shows nodE.
02) Press the **SETUP** button to open the submenu, then press the **UP/DOWN** buttons to toggle between one of the 5 dimmer curves from fast to slow: nod0 Up/Down nod4.
03) nod0 is linear, nod1 Up/Down nod4 is from (1 sec- 4 sec. dimming curve).

⚠ nod1 Up/Down nod4 modes always override Channel 9 ⚠

13. LED Display

With this menu you can set the LED Display On or Off.

01) Press the **MODE** button until the display shows LEd.
02) Press **Setup** to enter the LED Display Menu. You can choose 2 different settings.
03) Use the **Up / Down** buttons to select:

on: The LED display will light all the time.

oFF: The LED display will turn off after 30 seconds.

14. Temperature

With this menu, you can see what the current temperature of the LEDs is.

01) Press the **MODE** button until the display shows TEmP.
02) Press the **SETUP** button to open the submenu, you will see the current temperature 48.

15. Version

With this menu, you can see what version software your Club Par has.

01) Press the **MODE** button until the display shows TEmP.
02) Press the **SETUP** button to open the submenu, you will see the current version U3.3.

16. Reset

With this menu, you can see reset your Club Par.

01) Press the **MODE** button until the display shows rSEt.
02) Press the **SETUP** button to open the submenu, then press the **UP/DOWN** buttons to confirm the reset . no Up/Down YES

DMX Channels

4 channels

Channel 1 – Red

0-255	Gradual adjustment Red, from 0-100%

Channel 2 – Green

0-255	Gradual adjustment Green, from 0-100%

Channel 3 – Blue

0-255	Gradual adjustment Blue, from 0-100%

Channel 4 – White

0-255	Gradual adjustment White, from 0-100%

9 channels

Channel 1 – Dimmer intensity

0-255	Gradual adjustment, from dark to brightest 0-100%

Channel 2 – Red ⚠ Dimmer must be open ⚠

0-255	Gradual adjustment Red, from 0-100%

Channel 3 – Green ⚠ Dimmer must be open ⚠

0-255	Gradual adjustment Green, from 0-100%

Channel 4 – Blue ⚠ Dimmer must be open ⚠

0-255	Gradual adjustment Blue, from 0-100%

Channel 5 – White ⚠ Dimmer must be open ⚠

0-255	Gradual adjustment White, from 0-100%

Channel 6 – Strobe

0-12	Closed
13-255	Strobe flash frequency, from slow to fast

Channel 7 – Built-in Programs

0-9	Not functional
10-19	Program 1
20-29	Program 2
30-39	Program 3
40-49	Program 4
50-59	Program 5
60-69	Program 6
70-79	Program 7
80-89	Program 8
90-99	Program 9
100-109	Program 10
110-119	Program 11
120-129	Program 12
130-139	Program 13
140-255	Sound-controlled

Channel 8 – Speed ⚠ CH7 must be set between 10-139 ⚠

0-255	Gradual speed adjustment, from slow to fast

Channel 9 – Fade Time ⚠ Mode must be set to ⚠

0-255	Gradual speed adjustment, from color jump to color fade

Maintenance

The operator has to make sure that safety-related and machine-technical installations are to be inspected by an expert after every year in the course of an acceptance test.
The operator has to make sure that safety-related and machine-technical installations are to be inspected by a skilled person once a year.

The following points have to be considered during the inspection:
01) All screws used for installing the device or parts of the device have to be tightly connected and must not be corroded.
02) There may not be any deformations on housings, fixations and installation spots.
03) Mechanically moving parts like axles, eyes and others may not show any traces of wearing.
04) The electric power supply cables must not show any damages or material fatigue.

The Club Par 12-4 RGBW requires almost no maintenance. However, you should keep the unit clean. Otherwise, the fixture's light-output will be significantly reduced. Disconnect the mains power supply, and then wipe the cover with a damp cloth. Do not immerse in liquid. Wipe lens clean with glass cleaner and a soft cloth. Do not use alcohol or solvents.
The front lens will require weekly cleaning, as smoke-fluid tends to build up residues, reducing the light-output very quickly.
Keep connections clean. Disconnect electric power, and then wipe the DMX and audio connections with a damp cloth. Make sure connections are thoroughly dry before linking equipment or supplying electric power.

Replacing the Fuse

Power surges, short-circuit or inappropriate electrical power supply may cause a fuse to burn out.
If the fuse burns out, the product will not function whatsoever. If this happens, follow the directions below:
01) Unplug the unit from electric power source.
02) Insert a flat-headed screwdriver into a slot in the fuse cover. Gently pry up the fuse cover. The fuse will come out.
03) Remove the used fuse. If brown or unclear, it is burned out.
04) Insert the replacement fuse into the holder. Reinsert the fuse cover. Be sure to use a fuse of the same type and specification. See the product specification label for details.

Troubleshooting

This troubleshooting guide is meant to help solve simple problems.
If a problem occurs, carry out the steps below in sequence until a solution is found. Once the unit operates properly, do not carry out following steps.

No Light

If the light effect does not operate properly, refer servicing to a technician.
Suspect three potential problem areas as: the power supply, the LEDs, the fuse.
01) Power supply. Check that the unit is plugged into an appropriate power supply.
02) The LEDs. Return the Club Par to your Showtec dealer.
03) The fuse. Replace the fuse. See page 17 for replacing the fuse.
04) If all of the above appears to be O.K., plug the unit in again.
05) If you are unable to determine the cause of the problem, do not open the Club Par, as this may damage the unit and the warranty will become void.
06) Return the device to your Showtec dealer.

No Response to DMX

Suspect the DMX cable or connectors, a controller malfunction, a light effect DMX card malfunction.

01) Check the DMX setting. Make sure that DMX addresses are correct.
02) Check the DMX cable: Unplug the unit; change the DMX cable; then reconnect to electrical power. Try your DMX control again.
03) Determine whether the controller or light effect is at fault. Does the controller operate properly with other DMX products? If not, take the controller in for repair. If so, take the DMX cable and the light effect to a qualified technician.

Problem	Probable cause(s)	Solution
One or more fixtures do not function at all	No power to the fixture	• Check if power is switched on and cables are plugged in
	Primary fuse blown	• Replace fuse
Fixtures reset correctly, but all respond erratically or not at all to the controller	The controller is not connected.	• Connect controller.
	3-pin XLR Out of the controller does not match XLR Out of the first fixture on the link (i.e. signal is reversed)	• Install a phase reversing cable between the controller and the first fixture on the link
Fixtures reset correctly, but some respond erratically or not at all to the controller	Poor data quality	• Check data quality. If much lower than 100 percent, the problem may be a bad data link connection, poor quality or broken cables, missing termination plug, or a defective fixture disturbing the link
	Bad data link connection	• Inspect connections and cables. Correct poor connections. Repair or replace damaged cables
	Data link not terminated with 120 Ohm termination plug	• Insert termination plug in output jack of the last fixture on the link
	Incorrect addressing of the fixtures	• Check address setting
	One of the fixtures is defective and disturbs data transmission on the link	• Bypass one fixture at a time until normal operation is restored: unplug both connectors and connect them directly together. • Have the defective fixture serviced by a qualified technician
	3-pin XLR Out on the fixtures does not match (pins 2 and 3 reversed)	• Install a phase-reversing cable between the fixtures or swap pin 2 and 3 in the fixture that behaves erratically
No light or lamp cuts out intermittently	Fixture is too hot	• Allow the fixture to cool down • Clean the fan • Make sure air vents in control panel and the front lens are not blocked • Turn up the air conditioning
	LEDs damaged	• Disconnect the fixture and return it to your dealer
	The power supply settings do not match local AC voltage and frequency	• Disconnect fixture. Check settings and correct if necessary

Product Specifications

Model:	Showtec Club Par 12-4 RGBW
Input Voltage:	100-240 VAC, 60/50Hz
Power consumption:	77W (full output)
Drive Current:	500mA
Refresh rate	1200Hz
DMX linking:	30pcs
Protection rate:	IP-20
Fuse:	T2AL/250V
Dimensions:	290 x 270 x 110 mm (LxWxH)
Weight:	2,3 kg
Operating and Programming:	
Signal pin OUT:	Pin 1 (earth), pin 2 (-), pin 3 (+)
DMX Mode:	4 or 9 channels
Signal input:	3-pin DMX IN
Signal output:	3-pin DMX OUT
Electro-mechanical effects:	
LED Quantity:	12 x 4-in1 8W RGBW LEDs
Light output:	Lumens: 3200
Lux @2m:	5400
Color mixing:	RGBW
Beam angle:	25°
Dimmer:	0-100%
Strobe:	0-20Hz
Housing:	Metal & Flame retardant plastic
DMX-control:	via standard DMX-controller
On Board:	4-digit LED display for easy setup
Control:	Built-in programs, Static Colors, DMX, Sound-controlled, Manual Color control
Connections:	Dedicated IEC & 3-pin XLR IN & OUT
Cooling:	Internal fan
Max. ambient temperature t_a:	40°C
Max. housing temperature t_B:	80°C
Minimum distance:	
Minimum distance from flammable surfaces:	0,5 m
Minimum distance to lighted object:	1 m

Design and product specifications are subject to change without prior notice.

CE

Website: www.Showtec.info
Email: service@highlite.nl

Dimensions

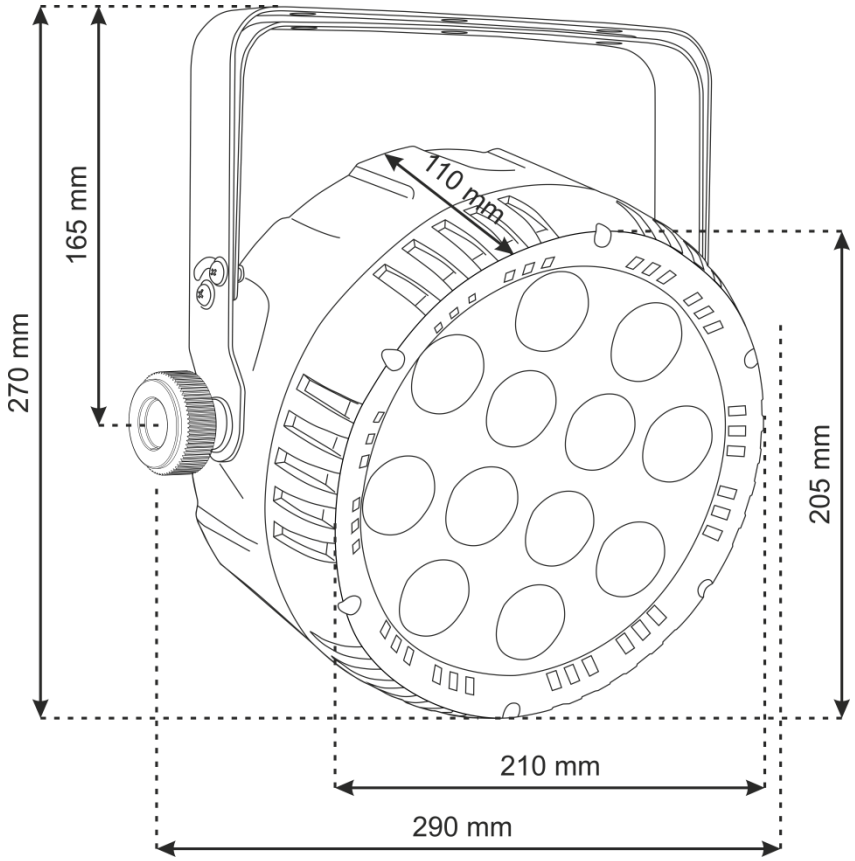
110 mm
165 mm
270 mm
205 mm
210 mm
290 mm

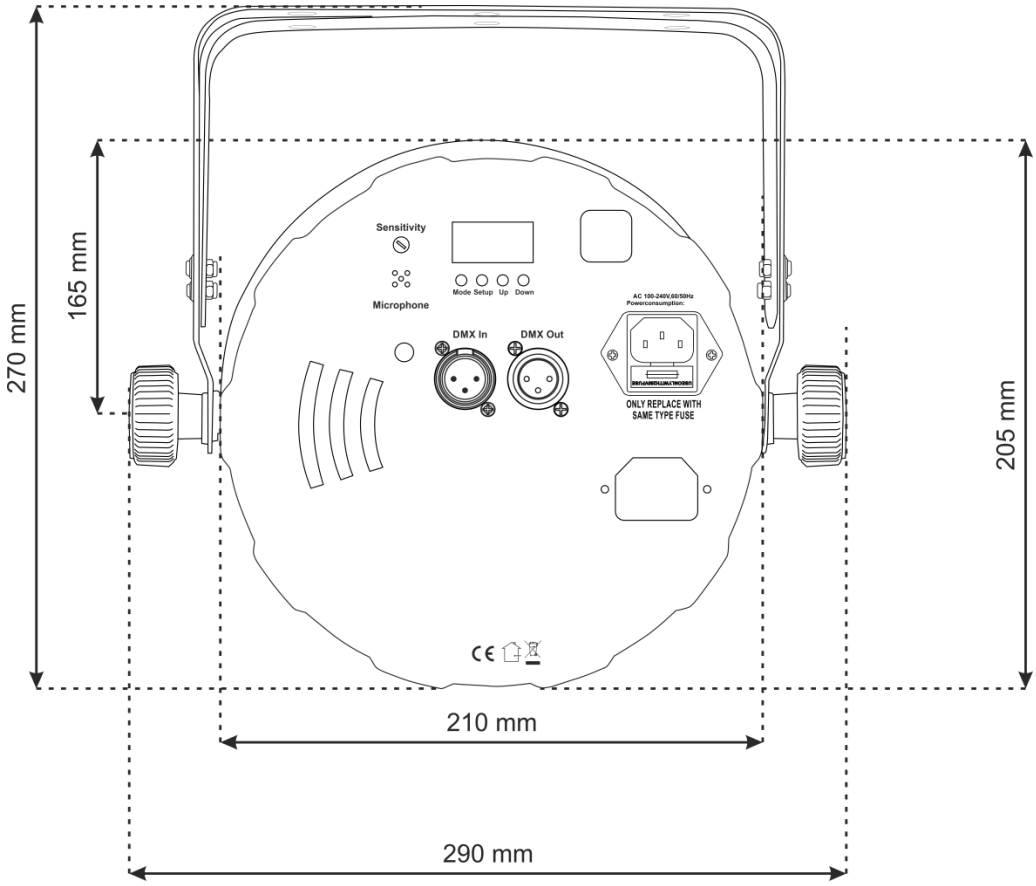
Sensitivity
Microphone
Mode Setup Up Down
DMX In
DMX Out
ONLY REPLACE WITH
SAME TYPE FUSE
165 mm
270 mm
205 mm
210 mm
290 mm

Notes

©2015 Showtec